ARISTON

SPARE PARTS EXPLODED VIEW
STORAGE ELECTRIC WATER HEATERS

Model

ABSE VLS PRO PW

R8218675-04 - 27/03/2024

EN	FR	IT	ES	DE	NL

ABSE VLS PRO PW

Storage Electric Water Heaters

Col	Reference	Model type	Begin	End
1	3700697	ABSE VLS PRO PW 30	04-2021	-
2	3700698	ABSE VLS PRO PW 50	04-2021	-
3	3700699	ABSE VLS PRO PW 80	04-2021	-
4	3700700	ABSE VLS PRO PW 100	04-2021	-

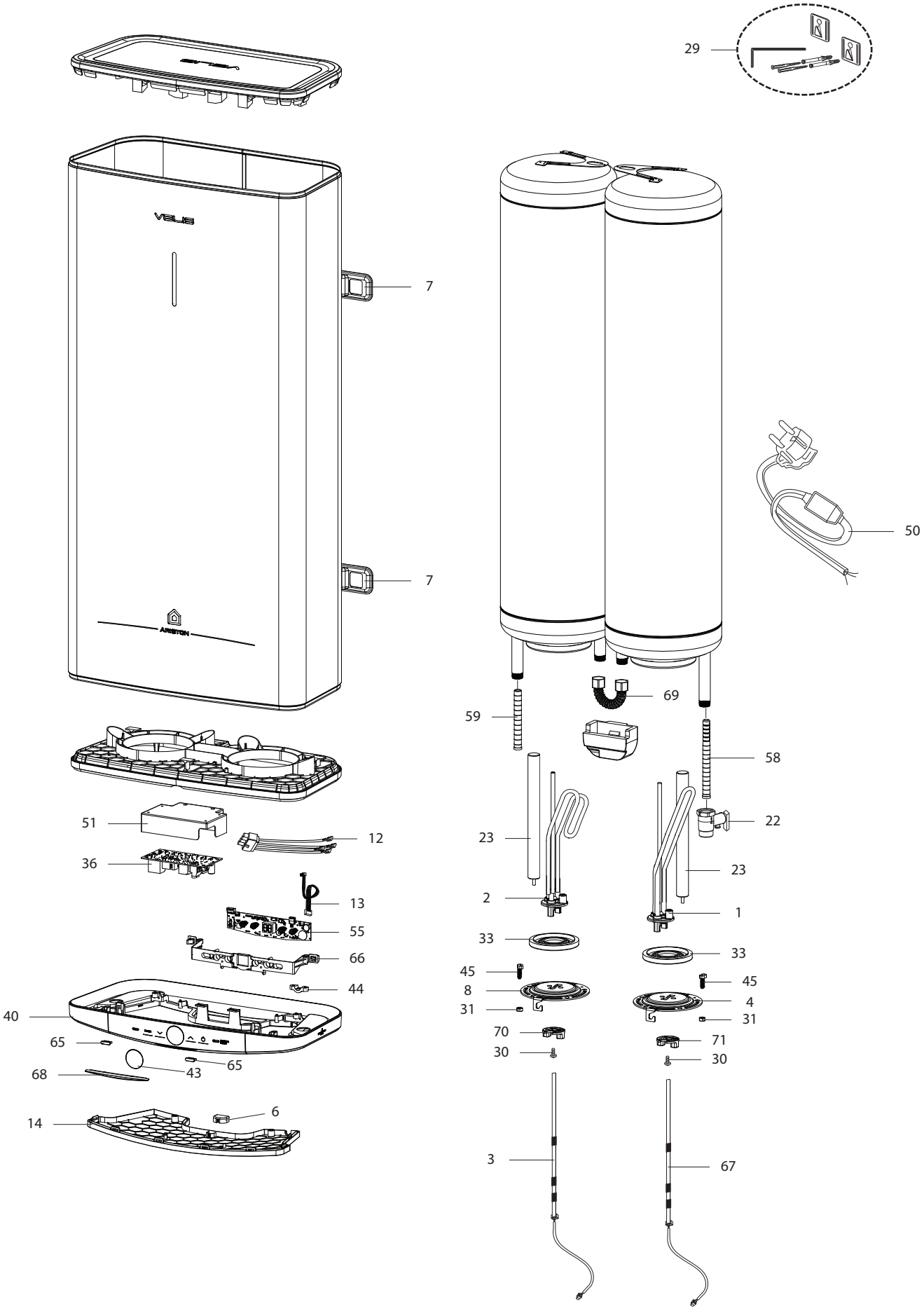
29
7
7
50
69
59
58
51
12
22
23
36
23
13
2
1
55
33
33
66
45
45
44
8
4
40
31
31
70
71
65
30
30
65
68
43
6
14
3
67

R8226863

	Description	Manf. Pt. N	Type	ABS. VLS PRO PW 30	ABS. VLS PRO PW 50	ABS. VLS PRO PW 80	ABS. VLS PRO PW 100	5	6	7	8	9	10	11	12	13	14	15	16	17	18	From	to
0001	HEATING ELEMENT 1000W 230V	65180040		●	●	●	●																
0002	HEATING ELEMENT 1500W 230V	65180069		●	●	●	●																
0003	WIRED NTC PROBE (OUTLET TANK)	65153300		●	●	●	●																
0004	FLANGE (5 HOLES)	65180108		●	●	●	●																
0006	WATER DRAIN STOPPER	65180442		●	●	●	●																
0007	SUPPORT BRACKET	65152905		●	●	●	●																
0008	FLANGE (5 HOLES)	65180071		●	●	●	●																
0012	WIRING (ELEMENT / MAIN BOARD)	65180072-01		●	●	●	●																
0013	WIRING (CONTROL BOARD)	65115286		●	●	●	●																
0014	PLASTIC COVER	65180444		●	●	●	●																
0022	SAFETY VALVE WITH LEVER (1/2” 8,5 BAR)	571730		●	●	●	●																
0023	ANODE D:21,3 L:180 M5	65180015		●	●																		
	ANODE D:25,5 L:230 M5-M8	993014-01				●	●																
0029	INSTALLATION KIT	65154451		●	●	●	●																
0030	SCREW M6X12	993000		●	●	●	●																
0031	NUT M6	994140		●	●	●	●																
0033	FLANGE GASKET	65111788		●	●	●	●																
0036	P.C.B. (MAIN)	65116249		●	●	●	●																
0040	BOTTOM BIG PLASTIC COVER	65180445		●	●	●	●																
0043	DISPLAY COVER	65180447		●	●	●	●																
0044	CABLE CLAMP	573266		●	●	●	●																
0045	SCREW M6X20	65151225		●	●	●	●																
0050	POWER CABLE WITH ELCB (16A 1,0м)	65150965		●	●	●	●																
0051	POWER BOARD BOX	65152908		●	●	●	●																
0055	CONTROL BOARD	65120778		●																			
	CONTROL BOARD	65120779			●																		
	CONTROL BOARD	65120780				●																	
	CONTROL BOARD	65120781					●																
0058	BAFFLE (1/2’’ H=159)	65152176		●	●	●	●																
0059	BAFFLE (1/2’’ H=100)	65152177		●	●	●	●																
0065	SIGNAL CAP	65180448		●	●	●	●																
0066	HOLDER FOR CONTROL BOARD	65180446		●	●	●	●																
0067	WIRED NTC PROBE (INLET TANK)	65153301		●	●	●	●																
0068	LED INDICATOR	65180449		●	●	●	●																
0069	BASIC PLASTIC PANEL (TM)	65152493		●	●	●	●																
0070	TERMINAL SHIELD (RED)	65180070		●	●	●	●																
0071	TERMINAL SHIELD (BLUE)	65180068		●	●	●	●																

LIST OF THE ABBREVIATIONS

HW	: Hot water.
CW	: Cold water.
C	: Ceramic resistance (normal heating).
Ca	: Ceramic resistance (accelerated heating)
TP	: Immersion heater.
1F	: With fittings.
2F	: Without fittings.
3F	: With fittings and another outlet connection.
AMI	: With mixing valve.
SMI	: Without mixing valve.
PUISS	: Power of th appliance.
PN	: Appliance with normal pression.
LP	: Appliance with low pression.
PV	: Appliance with variable power.
PF	: Appliance with fixed power.

IDENTIFICATION PLATE

SERIAL NUMBER

6 Characters : 03 09 08
- Year of manufacture
- Manufacturing day
- Month of manufacture

9 Characters : 5 9 12 0606
- Year of manufacture
- Month of manufacture
- Sequencial number

14 Characters : SI-V-0B0 45 07 0001
- Sequencial number
- Year of manufacture : 6 → 2004, 7 → 2005, 8 → 2006 etc ...
- Month of manufacture : 25 → January, 13 → February, 32 → March, 35 → April, 39 → May, 45 → June, 43 → July, 29 → August, 40 → September, 38 → October, 51 → November, 12 → December
- Product model

14 Characters : 111518 XX 000010
- Month of manufacture
- Day of manufacture
- Sequencial number
- Year of manufacture

15 Characters : 02 11 00001 007843
- Year of manufacture
- Month of manufacture
- Product reference
- Sequencial number

21 Characters : 3200050 XX 08115 0000001
- Product reference
- Sequencial number
- Year (08) / Manufacturing day (115)

22 Characters : 3200050 XX 070115 0000001
- Product reference
- Sequencial number
- Year (07) / Month (01) / Manufacturing day (15)

The indications mentionned on the prices, commercial or technical literature and the scheme are written for your guidance and are available at a given time. The CONSTRUCTOR retains the power to modify the presentation, the form, the size, the conception or the material of the products.